NEXUS DAMA LED



Technical drawings

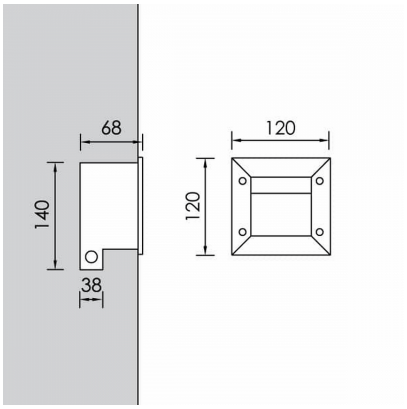

Product Details

CE LM80 Source Type H.P. LED

General Information

Housing	Stainless steel / Aluminium
Product code	WF0267CL001ON
Product family	NEXUS
Diffuser	Safety Glass Clear
Options for Dimming Control	On-Off
Width	120 mm
Length	120 mm
Height	68 mm

Electrical data

Consumption	3.13 W
Performance	26.52 lm/W
Ripple	3
Power Factor	0.96

Luminaire Output

Luminous Flux	83 lm
CRI CCT	930

Light distribution

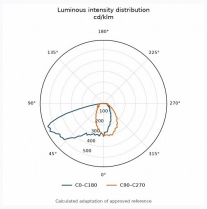

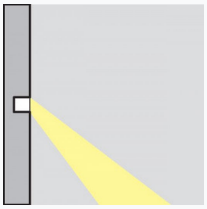

Safety characteristics

IK	06
IP	65

Temperature Operating Conditions

Lifetime	>50.000h L80B10