NEXUS GROUND BRASS H.P.LED

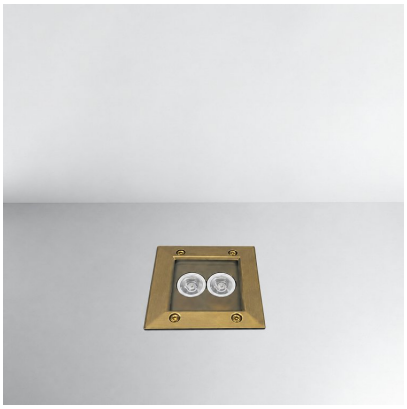

Technical drawings

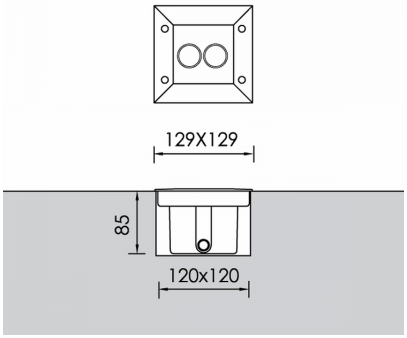

Product Details

CE LM80 Source Type H.P. LED

General Information

Housing	Stainless steel / Aluminium
Product code	GR0368CL003ON
Product family	NEXUS
Control Gear	Remote Electronic Driver
Options for Dimming Control	On-Off
Width	129 mm
Length	129 mm
Height	85 mm

Electrical data

Consumption	3.24 W
Performance	96.3 lm/W
Ripple	3
Power Factor	0.96

Luminaire Output

Beam Type	UN
Beam	8º
Luminous Flux	312 lm
CRI CCT	927

Light distribution

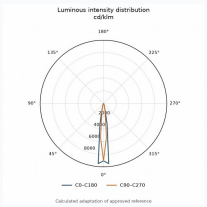

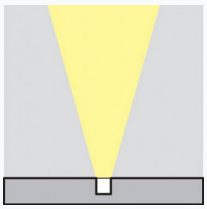

Safety characteristics

IK	08
IP	67

Temperature Operating Conditions

Lifetime	>50.000h L80B10