NEXUS GROUND BRASS H.P.LED

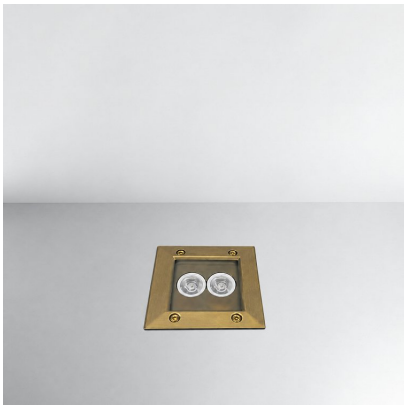

Technical drawings

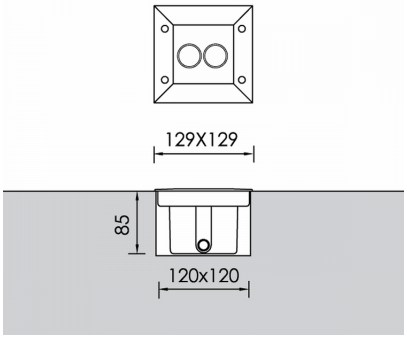

Product Details

CE LM80 Source Type H.P. LED

General Information

Housing	Brass
Product code	GR0370CL003ON
Product family	NEXUS
Control Gear	Remote Electronic Driver
Options for Dimming Control	On-Off
Width	129 mm
Length	129 mm
Height	85 mm

Electrical data

Consumption	3.24 W
Performance	96.3 lm/W
Ripple	3
Power Factor	0.96

Luminaire Output

Beam Type	W
Beam	45º
Luminous Flux	312 lm
CRI CCT	927

Light distribution

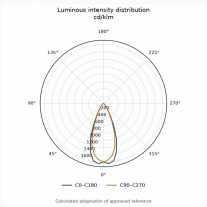

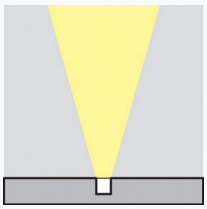

Safety characteristics

IK	08
IP	67

Temperature Operating Conditions

Lifetime	>50.000h L80B10