NEXUS OUTDOOR H.P.LED



Technical drawings

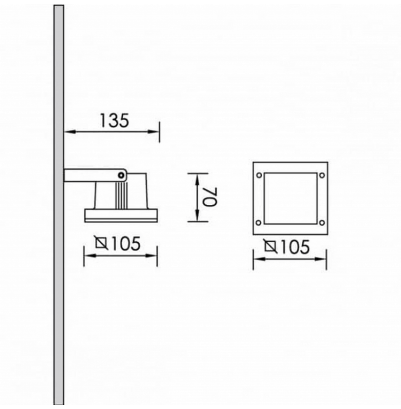

Product Details

CE LM80 Source Type H.P. LED

General Information

Housing	Aluminium
Product code	PJ0431CL001DAC
Product family	NEXUS
Diffuser	Sandblasted safety glass
Options for Dimming Control	DALI2
Options for Wireless Dimming	Casambi
Width	105 mm
Length	105 mm
Height	70 mm

Electrical data

Consumption	1.12 W
Performance	116.07 lm/W
Ripple	3
Power Factor	0.96

Luminaire Output

Beam Type	W
Beam	45º
Luminous Flux	130 lm
CRI CCT	940

Light distribution

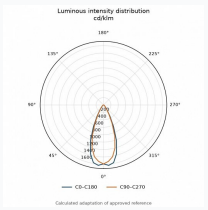

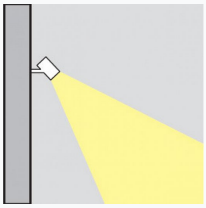

Safety characteristics

IK	04
IP	65

Temperature Operating Conditions

Lifetime	>50.000h L80B10