NEXUS OUTDOOR H.P.LED



Technical drawings

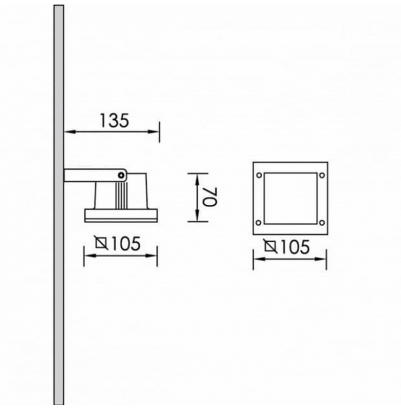

Product Details

CE LM80 Source Type H.P. LED

General Information

Housing	Aluminium
Product code	PJ0433CL003DA
Product family	NEXUS
Diffuser	Sandblasted safety glass
Options for Dimming Control	DALI2
Width	105 mm
Length	105 mm
Height	70 mm

Electrical data

Consumption	1.62 W
Performance	96.3 lm/W
Ripple	3
Power Factor	0.96

Luminaire Output

Beam Type	UN
Beam	8º
Luminous Flux	156 lm
CRI CCT	927

Light distribution

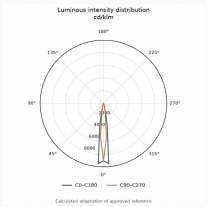

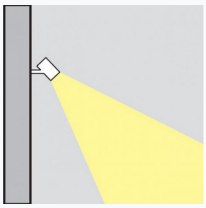

Safety characteristics

IK	04
IP	65

Temperature Operating Conditions

Lifetime	>50.000h L80B10