# NEXUS OUTDOOR Q LED



## Technical drawings

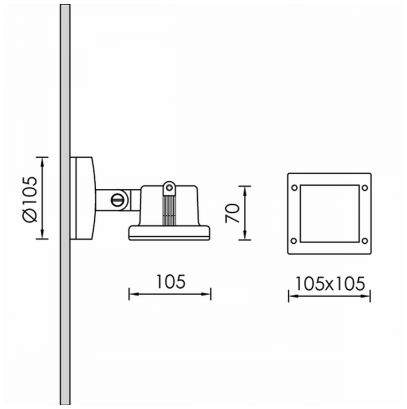


## Product Details

CE LM80 Source Type H.P. LED

### General Information

| | |
|---|---|
| Housing | Aluminium |
| Product code | PJ0452CL002 |
| Product family | NEXUS |
| Diffuser | Clear / Sandblasted safety glass |
| Width | 105 mm |
| Length | 105 mm |
| Height | 70 mm |

### Electrical data

| | |
|---|---|
| Consumption | 1.12 W |
| Performance | 105.36 lm/W |
| Ripple | 3 |
| Power Factor | 0.96 |
| Nominal Voltage | 230 V |

### Luminaire Output

| | |
|---|---|
| Beam Type | ASY |
| Beam | 13x45º |
| Luminous Flux | 118 lm |
| CRI CCT | 930 |

### Light distribution

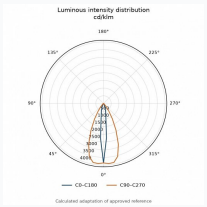


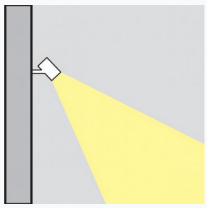

### Safety characteristics

| | |
|---|---|
| IK | 07 |
| IP | 65 |

### Temperature Operating Conditions

| | |
|---|---|
| Lifetime | >50.000h L80B10 |