NEXUS OUTDOOR Q LED



Technical drawings

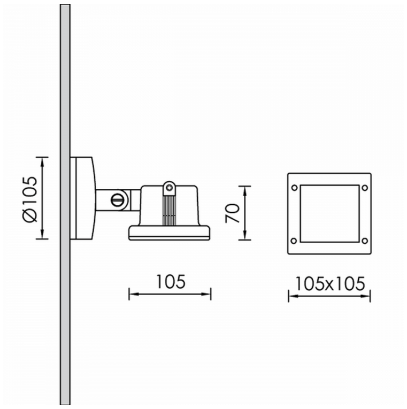

Product Details

CE LM80 Source Type H.P. LED

General Information

Housing	Aluminium
Product code	PJ0456CL001
Product family	NEXUS
Diffuser	Clear / Sandblasted safety glass
Width	105 mm
Length	105 mm
Height	70 mm

Electrical data

Consumption	1.12 W
Performance	116.07 lm/W
Ripple	3
Power Factor	0.96
Nominal Voltage	230 V

Luminaire Output

Beam Type	ASY
Beam	13x45º
Luminous Flux	130 lm
CRI CCT	940

Light distribution

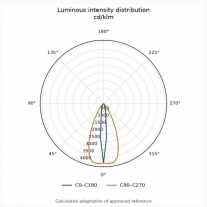

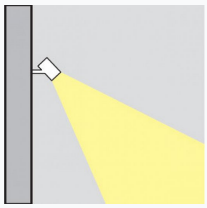

Safety characteristics

IK	07
IP	65

Temperature Operating Conditions

Lifetime	>50.000h L80B10