HEADOFFICE: Showroom 13 Sofokli Venizelou Ave., Likovrisi, P.O. Box 14123, Athens, Greece Tel: (+30) 210 2851 304 I www.bright.gr I info@bright.gr

# NINIO 2 H.P.LED



## Technical drawings

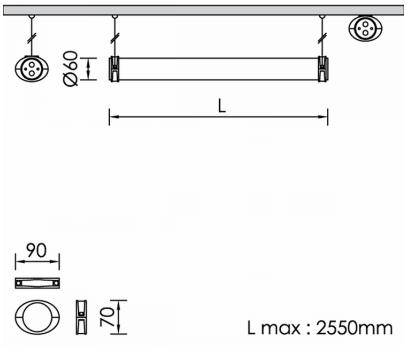


## Product Details

CE LM80 Source Type H.P. LED

### General Information

| | |
|---|---|
| Housing | PMMA |
| Product code | FA0217CL001DA |
| Product family | NINIO |
| Diffuser | Opal PMMA |
| Control Gear | Built-in ECG |
| Options for Dimming Control | DALI2 |

### Electrical data

| | |
|---|---|
| Consumption | 40.5 W |
| Performance | 96.25 lm/W |
| Ripple | 3 |
| Power Factor | 0.96 |
| Nominal Voltage | 230 V |

### Luminaire Output

| | |
|---|---|
| Beam Type | UN |
| Beam | 8º |
| Luminous Flux | 3898 lm |
| CRI CCT | 927 |

### Light distribution

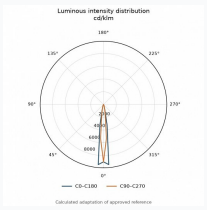


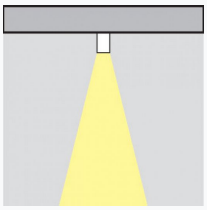

### Safety characteristics

| | |
|---|---|
| IK | 05 |
| IP | 68 |

### Temperature Operating Conditions

| | |
|---|---|
| Lifetime | >50.000h L80B10 |