HEADOFFICE: Showroom 13 Sofokli Venizelou Ave., Likovrisi, P.O. Box 14123, Athens, Greece Tel: (+30) 210 2851 304 I www.bright.gr I info@bright.gr

NINIO 2 H.P.LED



Technical drawings

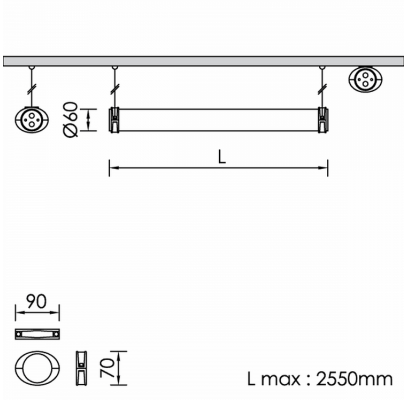

Product Details

CE LM80 Source Type H.P. LED

General Information

Housing	PMMA
Product code	FA0261CL002DAC
Product family	NINIO
Diffuser	Opal PMMA
Control Gear	Built-in ECG
Options for Dimming Control	DALI2
Options for Wireless Dimming	Casambi

Electrical data

Consumption	33.6 W
Performance	116.43 lm/W
Ripple	3
Power Factor	0.96
Nominal Voltage	230 V

Luminaire Output

Beam Type	UN
Beam	8º
Luminous Flux	3912 lm
CRI CCT	940

Light distribution

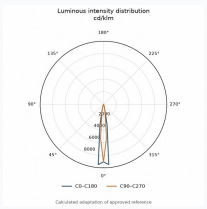

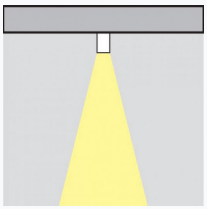

Safety characteristics

IK	05
IP	68

Temperature Operating Conditions

Lifetime	>50.000h L80B10