NINIO 2 H.P.LED



Technical drawings

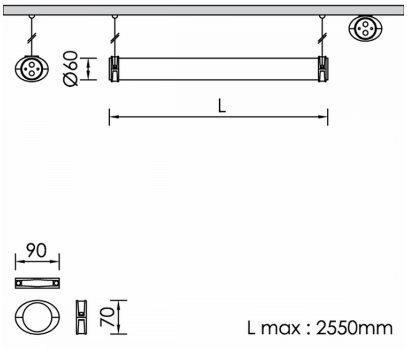

Product Details

CE LM80 Source Type H.P. LED

General Information

Housing	PMMA
Product code	FA0317CL009ON
Product family	NINIO
Diffuser	Opal PMMA
Control Gear	Built-in ECG
Options for Dimming Control	On-Off

Electrical data

Consumption	68.04 W
Performance	101.23 lm/W
Ripple	3
Power Factor	0.96
Nominal Voltage	230 V

Luminaire Output

Beam Type	UN
Beam	8º
Luminous Flux	6888 lm
CRI CCT	930

Light distribution

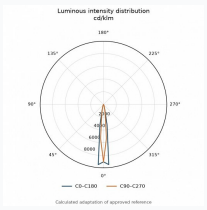

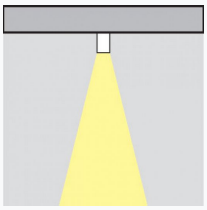

Safety characteristics

IK	05
IP	68

Temperature Operating Conditions

Lifetime	>50.000h L80B10