# NOVUS H.P.LED



## Technical drawings

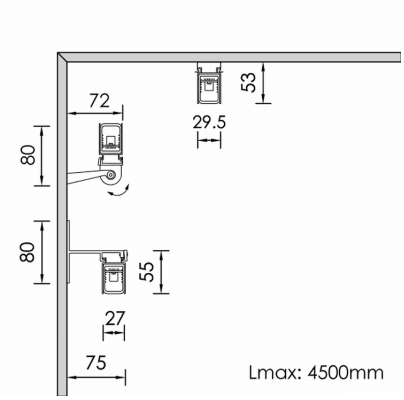


## Product Details

CE LM80 Source Type H.P. LED

### General Information

| | |
|---|---|
| Housing | Aluminium |
| Product code | FA3015CL001DAC |
| Product family | NOVUS |
| Diffuser | Clear PMMA |
| Control Gear | Remote Electronic Driver |
| Options for Dimming Control | DALI2 |
| Options for Wireless Dimming | Casambi |
| Width | 27 mm |
| Length | 2480 mm |
| Height | 55 mm |

### Electrical data

| | |
|---|---|
| Consumption | 45.92 W |
| Performance | 100.72 lm/W |
| Ripple | 3 |
| Power Factor | 0.96 |

### Luminaire Output

| | |
|---|---|
| Beam Type | W |
| Beam | 45º |
| Luminous Flux | 4625 lm |
| CRI CCT | 927 |

### Light distribution

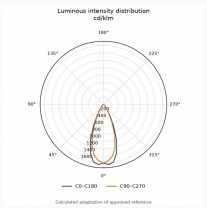


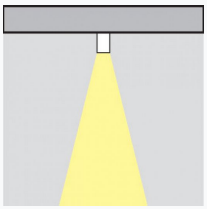

### Safety characteristics

| | |
|---|---|
| IK | 10 |
| IP | 68 |
| Protection Class | Class III |

### Temperature Operating Conditions

| | |
|---|---|
| Lifetime | >50.000h L80B10 |