NOVUS H.P.LED



Technical drawings

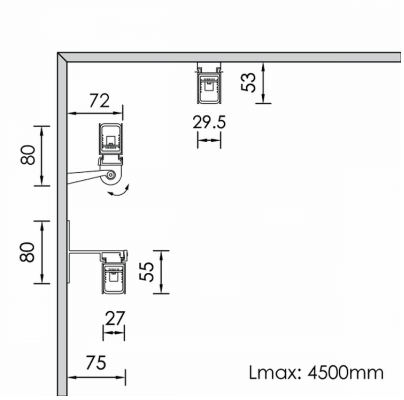

Product Details

CE LM80 Source Type H.P. LED

General Information

Housing	Aluminium
Product code	FA3052CL002DAC
Product family	NOVUS
Diffuser	Clear PMMA
Control Gear	Remote Electronic Driver
Options for Dimming Control	DALI2
Options for Wireless Dimming	Casambi
Width	27 mm
Length	2540 mm
Height	55 mm

Electrical data

Consumption	68.04 W
Performance	96.24 lm/W
Ripple	3
Power Factor	0.96

Luminaire Output

Beam Type	ASY
Beam	13x45º
Luminous Flux	6548 lm
CRI CCT	927

Light distribution

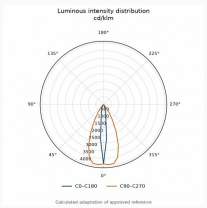

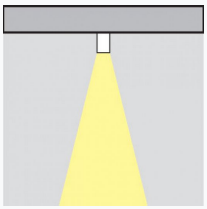

Safety characteristics

IK	10
IP	68
Protection Class	Class III

Temperature Operating Conditions

Lifetime	>50.000h L80B10