NOVUS H.P.LED



Technical drawings

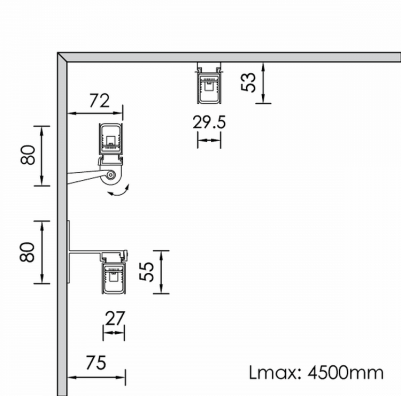

Product Details

CE LM80 Source Type H.P. LED

General Information

Housing	Aluminium
Product code	FA3746CL002DAC
Product family	NOVUS
Diffuser	Clear PMMA
Control Gear	Remote Electronic Driver
Options for Dimming Control	DALI2
Options for Wireless Dimming	Casambi
Width	27 mm
Length	4280 mm
Height	55 mm

Electrical data

Consumption	115.02 W
Performance	96.24 lm/W
Ripple	3
Power Factor	0.96

Luminaire Output

Beam Type	M
Beam	25º
Luminous Flux	11069 lm
CRI CCT	927

Light distribution

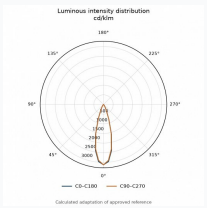

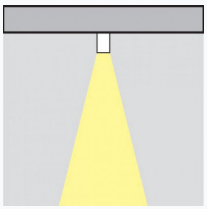

Safety characteristics

IK	10
IP	68
Protection Class	Class III

Temperature Operating Conditions

Lifetime	>50.000h L80B10