NOXA 2 LED



Technical drawings

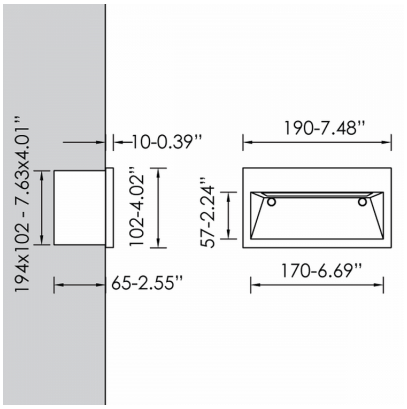

Product Details

CE LM80 Source Type H.P. LED

General Information

Housing	Aluminium
Product code	WF0284CL001DAC
Product family	NOXA
Diffuser	Opal Polycarbonate
Options for Dimming Control	DALI2
Options for Wireless Dimming	Casambi
Width	102 mm
Length	190 mm
Height	65 mm

Electrical data

Consumption	3.2 W
Performance	75.63 lm/W
Ripple	3
Power Factor	0.96

Luminaire Output

Beam Type	ASY
Luminous Flux	242 lm
CRI CCT	930

Light distribution

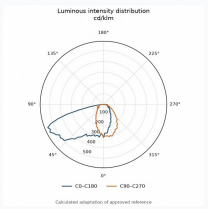

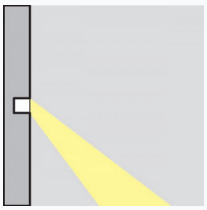

Safety characteristics

IK	08
IP	65

Temperature Operating Conditions

Lifetime	>50.000h L80B10 Module 2x H.P.LED CRI80 Ripple <3%