NOXA 2 LED



Technical drawings

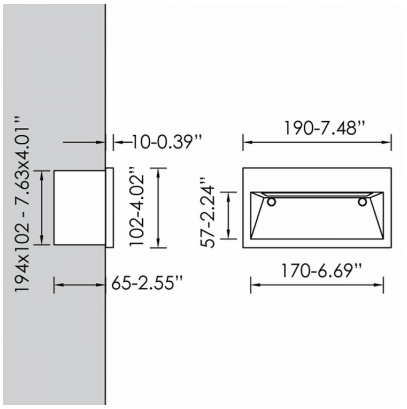

Product Details

CE LM80 Source Type H.P. LED

General Information

Housing	Aluminium
Product code	WF0285CL003ON
Product family	NOXA
Diffuser	Opal Polycarbonate
Options for Dimming Control	On-Off
Width	102 mm
Length	190 mm
Height	65 mm

Electrical data

Consumption	2.2 W
Performance	87.73 lm/W
Ripple	3
Power Factor	0.96

Luminaire Output

Beam Type	ASY
Luminous Flux	193 lm
CRI CCT	940

Light distribution

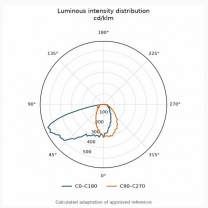

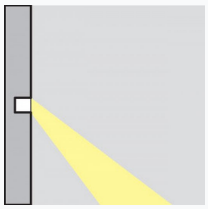

Safety characteristics

IK	08
IP	65

Temperature Operating Conditions

Lifetime	>50.000h L80B10 Module 2x H.P.LED CRI80 Ripple <3%