# NOXA 2 LED



## Technical drawings

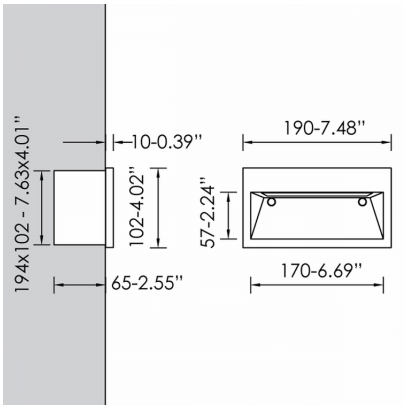


## Product Details

CE LM80 Source Type H.P. LED

### General Information

| | |
|---|---|
| Housing | Aluminium |
| Product code | WF0292CL009ON |
| Product family | NOXA |
| Diffuser | Opal Polycarbonate |
| Options for Dimming Control | On-Off |
| Width | 102 mm |
| Length | 190 mm |
| Height | 65 mm |

### Electrical data

| | |
|---|---|
| Consumption | 4.8 W |
| Performance | 81.25 lm/W |
| Ripple | 3 |
| Power Factor | 0.96 |

### Luminaire Output

| | |
|---|---|
| Beam Type | ASY |
| Luminous Flux | 390 lm |
| CRI CCT | 940 |

### Light distribution

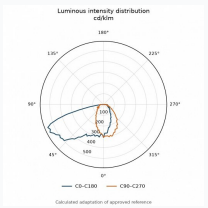


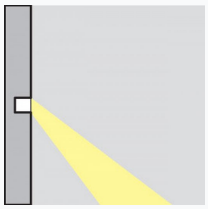

### Safety characteristics

| | |
|---|---|
| IK | 08 |
| IP | 65 |

### Temperature Operating Conditions

| | |
|---|---|
| Lifetime | >50.000h L80B10 Module 2x H.P.LED CRI80 Ripple <3% |