NUDO DAMA 2 LED



Technical drawings

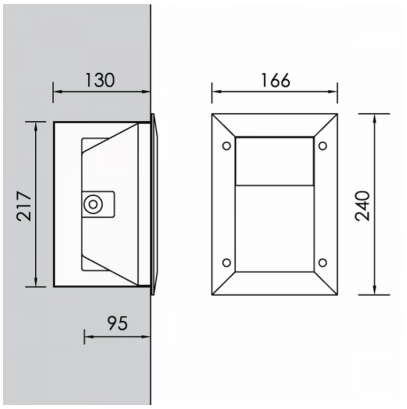

Product Details

CE LM80 Source Type H.P. LED

General Information

Housing	Aluminium
Product code	WF0315CL002ON
Product family	NUDO
Diffuser	Safety Glass Clear
Options for Dimming Control	On-Off
Width	240 mm
Length	166 mm
Height	130 mm

Electrical data

Consumption	3.13 W
Performance	53.04 lm/W
Ripple	3
Power Factor	0.96
Nominal Voltage	230 V

Luminaire Output

Beam Type	ASY
Luminous Flux	166 lm
CRI CCT	930

Light distribution

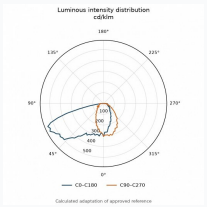

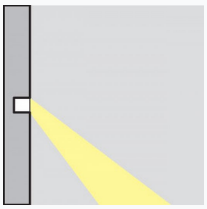

Safety characteristics

IK	07
IP	65

Temperature Operating Conditions

Lifetime	>50.000h L80B10