PALUS SPOT H.P.LED



Technical drawings

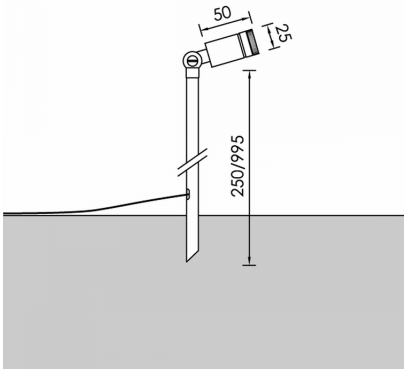

Product Details

CE LM80 Source Type H.P. LED

General Information

Housing	Brass
Product code	BO0289CL109ON
Product family	PALUS
Control Gear	Remote Electronic Driver
Options for Dimming Control	On-Off
Height	50 mm
Diameter	25 mm

Electrical data

Consumption	1.12 W
Performance	105.36 lm/W
Ripple	3
Power Factor	0.96

Luminaire Output

Beam Type	UN
Beam	8º
Luminous Flux	118 lm
CRI CCT	930

Light distribution

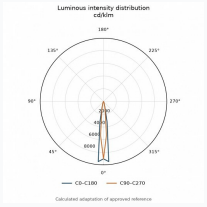

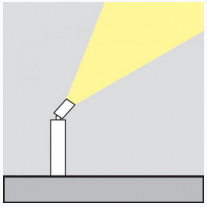

Safety characteristics

IK	05
IP	65

Temperature Operating Conditions

Lifetime	>50.000h | L80B10