# PONOS PA 42A H.P.LED



## Technical drawings

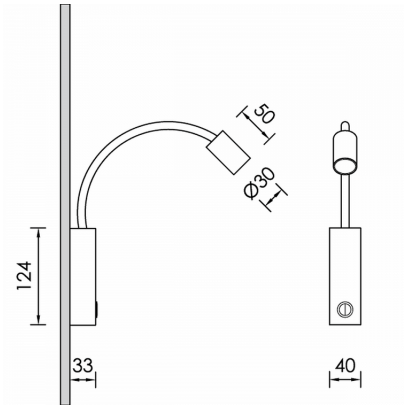


## Product Details

CE LM80 Source Type H.P. LED

### General Information

| | |
|---|---|
| Housing | Steel, Aluminium |
| Product code | DER0418CL004ON |
| Product family | PONOS |
| Control Gear | Built-in ECG |
| Options for Dimming Control | On-Off |

### Electrical data

| | |
|---|---|
| Consumption | 1.1 W |
| Performance | 119.09 lm/W |
| Ripple | 3 |
| Power Factor | 0.96 |

### Luminaire Output

| | |
|---|---|
| Beam Type | W |
| Beam | 45º |
| Luminous Flux | 131 lm |
| CRI CCT | 940 |

### Light distribution

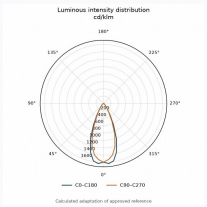


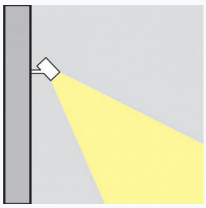

### Safety characteristics

| | |
|---|---|
| IK | 05 |
| IP | 40 |

### Temperature Operating Conditions

| | |
|---|---|
| Lifetime | >50.000h L80B10 |