PONOS PA 42A H.P.LED



Technical drawings

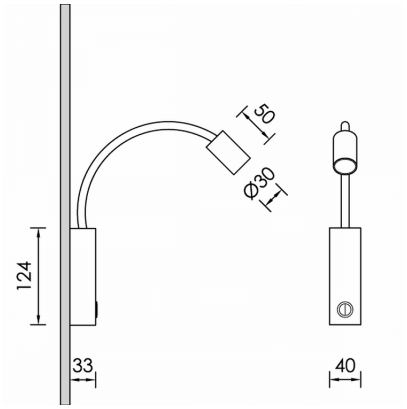

Product Details

CE LM80 Source Type H.P. LED

General Information

Housing	Steel, Aluminium
Product code	DER0424CL001DA
Product family	PONOS
Control Gear	Built-in ECG
Options for Dimming Control	DALI2

Electrical data

Consumption	1.1 W
Performance	108.18 lm/W
Ripple	3
Power Factor	0.96

Luminaire Output

Beam Type	N
Beam	8º
Luminous Flux	119 lm
CRI CCT	930

Light distribution

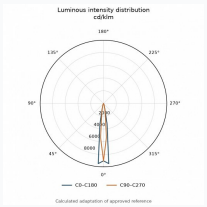

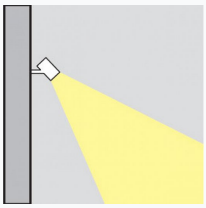

Safety characteristics

IK	05
IP	40

Temperature Operating Conditions

Lifetime	>50.000h L80B10