TACTUS 16 SATIS 1F H.P.LED



Technical drawings

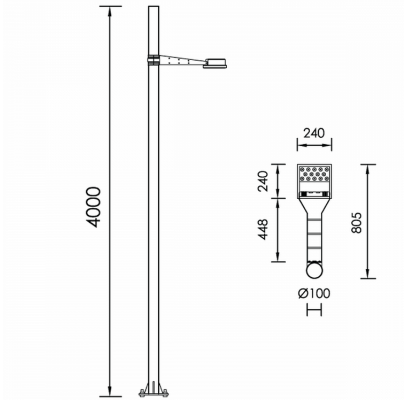

Product Details

CE LM80 Source Type H.P. LED

General Information

Housing	Aluminium
Product code	AM0465CL009ON
Product family	TACTUS
Diffuser	Safety Glass Clear
Control Gear	Built-in ECG
Options for Dimming Control	On-Off
Width	240 mm
Length	240 mm
Height	100 mm

Electrical data

Consumption	40 W
Performance	109.75 lm/W
Ripple	3
Power Factor	0.96

Luminaire Output

Beam Type	ASY
Beam	13x45º
Luminous Flux	4390 lm
CRI CCT	930

Light distribution

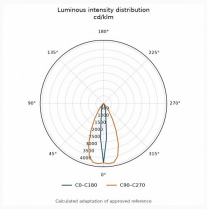

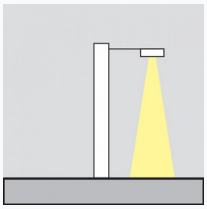

Safety characteristics

IK	08
IP	65

Temperature Operating Conditions

Lifetime	> 50.000h