# TACTUS 16 SATIS 2F H.P.LED



## Technical drawings

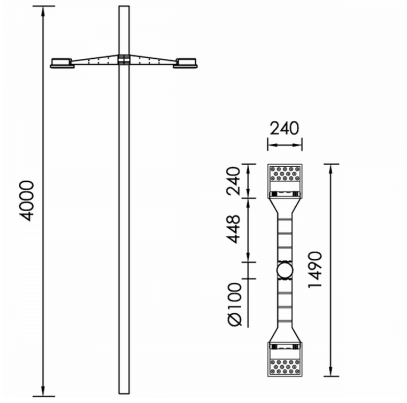


## Product Details

CE LM80 Source Type H.P. LED

### General Information

| | |
|---|---|
| Housing | Aluminium |
| Product code | AM0482CL001ON |
| Product family | TACTUS |
| Diffuser | Safety Glass Clear |
| Control Gear | Built-in ECG |
| Options for Dimming Control | On-Off |
| Width | 240 mm |
| Length | 240 mm |
| Height | 100 mm |

### Electrical data

| | |
|---|---|
| Consumption | 53.2 W |
| Performance | 120.86 lm/W |
| Ripple | 3 |
| Power Factor | 0.96 |

### Luminaire Output

| | |
|---|---|
| Beam Type | UN |
| Beam | 8º |
| Luminous Flux | 6430 lm |
| CRI CCT | 930 |

### Light distribution

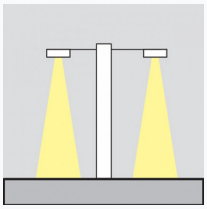

### Safety characteristics

| | |
|---|---|
| IK | 08 |
| IP | 65 |

### Temperature Operating Conditions

| | |
|---|---|
| Lifetime | > 50.000h |