TACTUS 16 SATIS 2F H.P.LED



Technical drawings

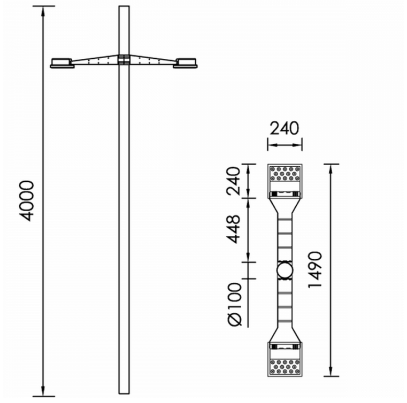

Product Details

CE LM80 Source Type H.P. LED

General Information

Housing	Aluminium
Product code	AM0487CL009ON
Product family	TACTUS
Diffuser	Safety Glass Clear
Control Gear	Built-in ECG
Options for Dimming Control	On-Off
Width	240 mm
Length	240 mm
Height	100 mm

Electrical data

Consumption	80 W
Performance	109.75 lm/W
Ripple	3
Power Factor	0.96

Luminaire Output

Beam Type	UN
Beam	8º
Luminous Flux	8780 lm
CRI CCT	930

Light distribution

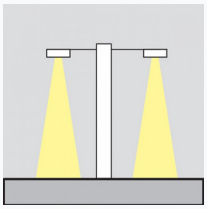

Safety characteristics

IK	08
IP	65

Temperature Operating Conditions

Lifetime	> 50.000h