TALIS 3 BRASS



Technical drawings

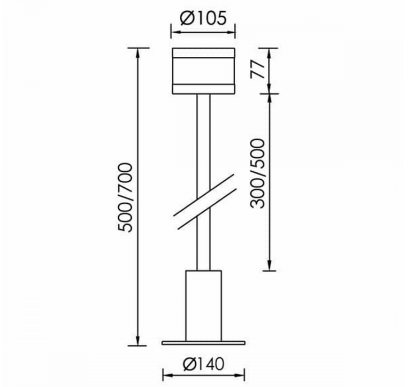

Product Details

CE

Source Type H.P. LED

General Information

Housing	Brass
Product code	BO0311CL109ON
Product family	TALIS
Diffuser	Opal PMMA
Control Gear	Remote Electronic Driver
Options for Dimming Control	On-Off
Height	700 mm
Diameter	140 mm

Electrical data

Consumption	4.69 W
Performance	64.82 lm/W
Ripple	3
Power Factor	0.96
Nominal Voltage	230 V

Luminaire Output

Luminous Flux	304 lm
CRI CCT	927

Light distribution

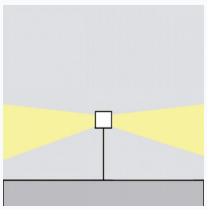

Safety characteristics

IK	04
IP	65

Temperature Operating Conditions