TERES 5 SQUARE SPOT



Technical drawings

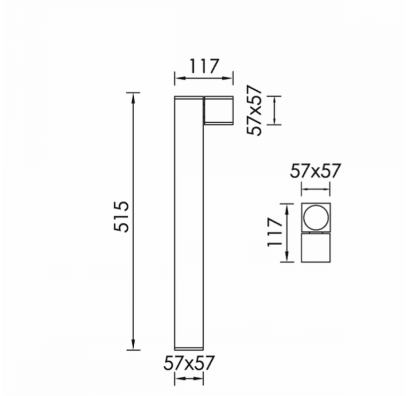

Product Details

CE LM80 LM79 TM21 REACH Source Type H.P. LED

General Information

Housing	Aluminium
Product code	BO0374CL009DA
Product family	TERES
Control Gear	Built-in ECG
Options for Dimming Control	DALI2
Width	57 mm
Length	117 mm
Height	515 mm

Electrical data

Consumption	1.12 W
Performance	105.36 lm/W
Ripple	3
Power Factor	0.96

Luminaire Output

Beam Type	UN
Beam	8º
Luminous Flux	118 lm
CRI CCT	930

Light distribution

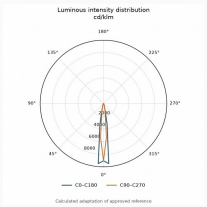

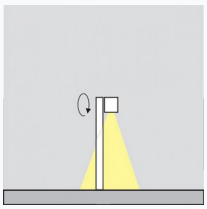

Safety characteristics

IK	05
IP	54

Temperature Operating Conditions

Lifetime	>50.000h L80B10