TERES 5 SQUARE SPOT



Technical drawings

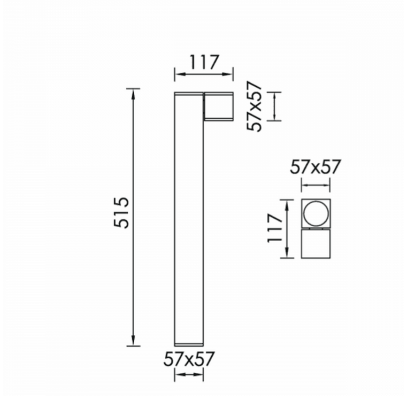

Product Details

CE LM80 LM79 TM21 REACH Source Type H.P. LED

General Information

Housing	Aluminium
Product code	BO0377CL009DAC
Product family	TERES
Diffuser	PMMA
Options for Dimming Control	DALI2
Options for Wireless Dimming	Casambi
Width	57 mm
Length	117 mm
Height	515 mm

Electrical data

Consumption	1.12 W
Performance	105.36 lm/W
Ripple	3
Power Factor	0.96

Luminaire Output

Beam Type	ASY
Beam	13x45º
Luminous Flux	118 lm
CRI CCT	930

Light distribution

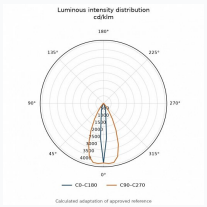

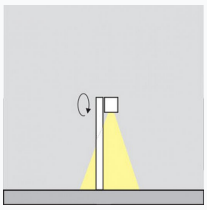

Safety characteristics

IK	05
IP	54

Temperature Operating Conditions

Lifetime	>50.000h L80B10