TERES M1 SMALL B LED



Technical drawings

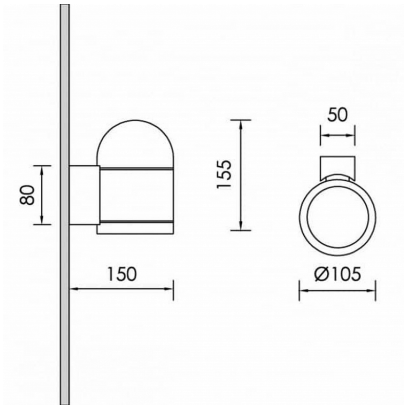

Product Details

CE LM80 LM79 TM21 REACH Source Type H.P. LED

General Information

Housing	Aluminium
Product code	WF0360CL003
Product family	TERES
Diffuser	Safety Glass Clear
Height	155 mm
Diameter	105 mm

Electrical data

Consumption	5.6 W
Performance	116.43 lm/W
Ripple	3
Power Factor	0.96
Nominal Voltage	230 V

Luminaire Output

Beam Type	M
Beam	25º
Luminous Flux	652 lm
CRI CCT	940

Light distribution

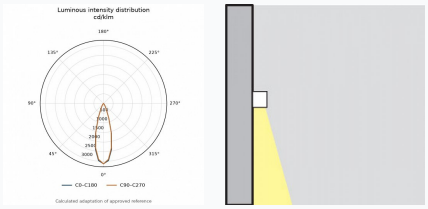

Safety characteristics

IK	07
IP	65

Temperature Operating Conditions

Lifetime	>50.000h L80B10 PAR16 / GU10 / 230V