HEADOFFICE: Showroom 13 Sofokli Venizelou Ave., Likovrisi, P.O. Box 14123, Athens, Greece Tel: (+30) 210 2851 304 I www.bright.gr I info@bright.gr

# TERES M1 SMALL BRASS H.P.LED



## Technical drawings

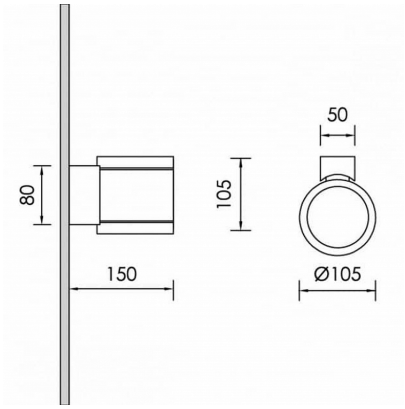


## Product Details

CE LM80 LM79 TM21 REACH

Source Type H.P. LED

### General Information

| | |
|---|---|
| Housing | Aluminium |
| Product code | WF0383CL009DA |
| Product family | TERES |
| Diffuser | Safety Glass Clear |
| Options for Dimming Control | DALI2 |
| Height | 105 mm |
| Diameter | 105 mm |

### Electrical data

| | |
|---|---|
| Consumption | 6.48 W |
| Performance | 101.23 lm/W |
| Ripple | 3 |
| Power Factor | 0.96 |

### Luminaire Output

| | |
|---|---|
| Beam Type | UN |
| Beam | 8º |
| Luminous Flux | 656 lm |
| CRI CCT | 930 |

### Light distribution

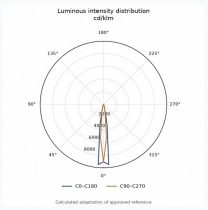


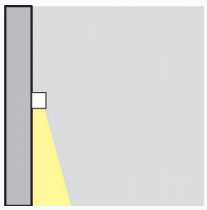

### Safety characteristics

| | |
|---|---|
| IK | 07 |
| IP | 65 |

### Temperature Operating Conditions

| | |
|---|---|
| Lifetime | >50.000h L80B10 Module 5x H.P.LED CRI80 Ripple <3% |