TERES M1 SMALL BRASS H.P.LED



Technical drawings

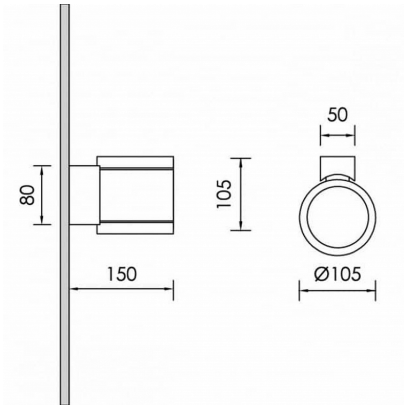

Product Details

CE LM80 LM79 TM21 REACH

Source Type H.P. LED

General Information

Housing	Brass
Product code	WF0385CL009DAC
Product family	TERES
Diffuser	Safety Glass Clear
Control Gear	Built-in ECG
Options for Dimming Control	DALI2
Options for Wireless Dimming	Casambi
Height	105 mm
Diameter	105 mm

Electrical data

Consumption	6.48 W
Performance	101.23 lm/W
Ripple	3
Power Factor	0.96

Luminaire Output

Beam Type	W
Beam	45º
Luminous Flux	656 lm
CRI CCT	930

Light distribution

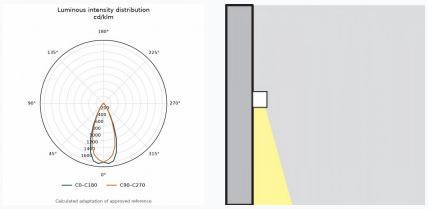

Safety characteristics

IK	07
IP	65

Temperature Operating Conditions

Lifetime	>50.000h L80B10 Module 5x H.P.LED CRI80 Ripple <3%