# TERES M1 SMALL BRASS H.P.LED



## Technical drawings

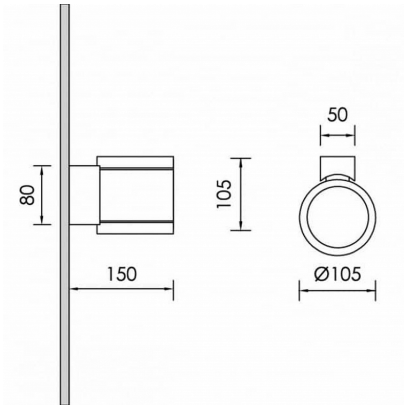


## Product Details

CE LM80 LM79 TM21 REACH

Source Type H.P. LED

### General Information

| | |
|---|---|
| Housing | Aluminium |
| Product code | WF0389CL009DAC |
| Product family | TERES |
| Diffuser | Safety Glass Clear |
| Control Gear | Built-in ECG |
| Options for Dimming Control | DALI2 |
| Options for Wireless Dimming | Casambi |
| Height | 105 mm |
| Diameter | 105 mm |

### Electrical data

| | |
|---|---|
| Consumption | 5.6 W |
| Performance | 100.71 lm/W |
| Ripple | 3 |
| Power Factor | 0.96 |

### Luminaire Output

| | |
|---|---|
| Beam Type | UN |
| Beam | 8º |
| Luminous Flux | 564 lm |
| CRI CCT | 927 |

### Light distribution

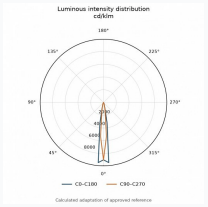


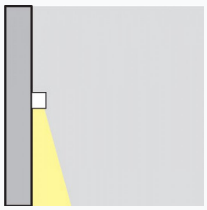

### Safety characteristics

| | |
|---|---|
| IK | 07 |
| IP | 65 |

### Temperature Operating Conditions

| | |
|---|---|
| Lifetime | >50.000h L80B10 Module 5x H.P.LED CRI80 Ripple <3% |