HEADOFFICE: Showroom 13 Sofokli Venizelou Ave., Likovrisi, P.O. Box 14123, Athens, Greece Tel: (+30) 210 2851 304 I www.bright.gr I info@bright.gr

TERES M1 SMALL BRASS H.P.LED



Technical drawings

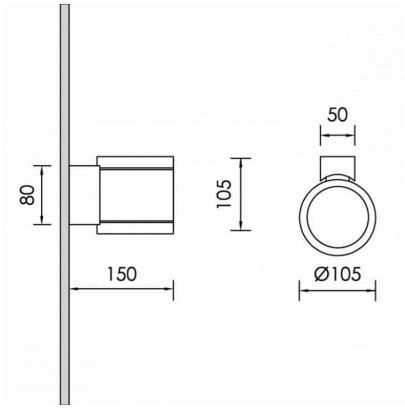

Product Details

CE LM80 LM79 TM21 REACH

Source Type H.P. LED

General Information

Housing	Aluminium
Product code	WF0399CL003DAC
Product family	TERES
Diffuser	Safety Glass Clear
Options for Dimming Control	DALI2
Options for Wireless Dimming	Casambi
Height	105 mm
Diameter	105 mm

Electrical data

Consumption	8.1 W
Performance	96.3 lm/W
Ripple	3
Power Factor	0.96

Luminaire Output

Beam Type	M
Beam	25º
Luminous Flux	780 lm
CRI CCT	927

Light distribution

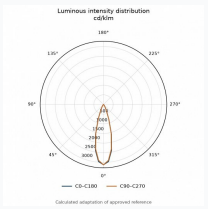

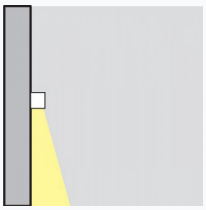

Safety characteristics

IK	07
IP	65

Temperature Operating Conditions

Lifetime	>50.000h L80B10 Module 5x H.P.LED CRI80 Ripple <3%