# TERES M1 SQUARE SMALL Q H.P.LED



## Technical drawings

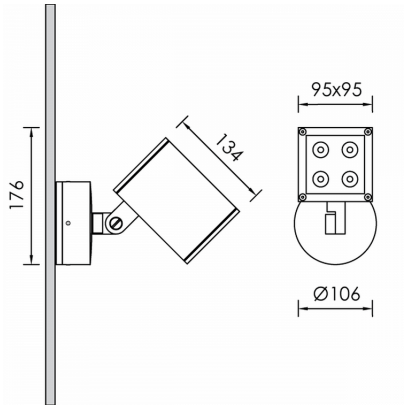


## Product Details

CE

Source Type H.P. LED

### General Information

| | |
|---|---|
| Housing | Aluminium |
| Product code | PJ0504CL009DA |
| Product family | TERES |
| Diffuser | Safety Glass Clear |
| Control Gear | Built-in ECG |
| Options for Dimming Control | DALI2 |
| Width | 95 mm |
| Length | 134 mm |
| Height | 95 mm |

### Electrical data

| | |
|---|---|
| Consumption | 4.48 W |
| Performance | 116.52 lm/W |
| Power Factor | 0.96 |

### Luminaire Output

| | |
|---|---|
| Beam Type | M |
| Beam | 25º |
| Luminous Flux | 522 lm |
| CRI CCT | 940 |

### Light distribution

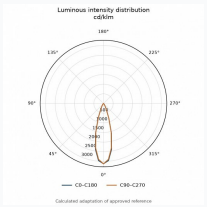


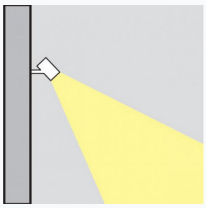

### Safety characteristics

| | |
|---|---|
| IK | 07 |
| IP | 54 |

### Temperature Operating Conditions