TERES M1 SQUARE SMALL Q H.P.LED



Technical drawings

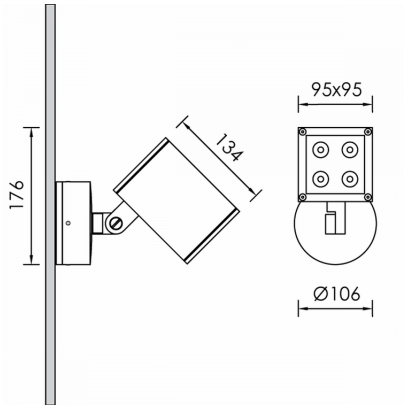

Product Details

CE

Source Type H.P. LED

General Information

Housing	Aluminium
Product code	PJ0507CL009DAC
Product family	TERES
Diffuser	Safety Glass Clear
Control Gear	Built-in ECG
Options for Dimming Control	DALI2
Options for Wireless Dimming	Casambi
Width	95 mm
Length	134 mm
Height	95 mm

Electrical data

Consumption	6.48 W
Performance	96.3 lm/W
Power Factor	0.96

Luminaire Output

Beam Type	UN
Beam	8º
Luminous Flux	624 lm
CRI CCT	927

Light distribution

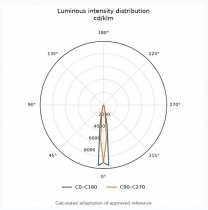

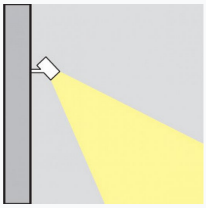

Safety characteristics

IK	07
IP	54

Temperature Operating Conditions