VISO 3 SP MINI 2F



Technical drawings

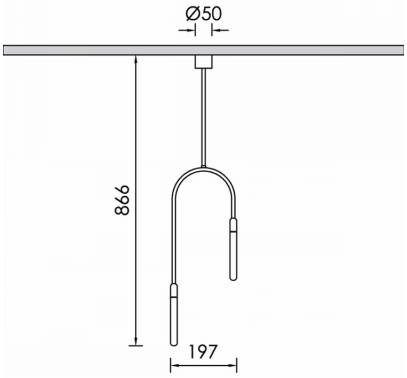

Product Details

CE LM80 LM79 TM21 REACH Source Type H.P. LED

General Information

Housing	Metal
Product code	DES0349CL003ON
Product family	VISO
Control Gear	Built-in ECG
Options for Dimming Control	On-Off
Length	197 mm
Height	866 mm

Electrical data

Consumption	3.4 W
Performance	103.24 lm/W
Ripple	3
Power Factor	0.96
Nominal Voltage	230 V

Luminaire Output

Beam Type	VW
Luminous Flux	351 lm
CRI CCT	940

Light distribution

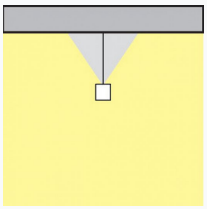

Safety characteristics

IK	07
IP	40
Protection Class	Class I

Temperature Operating Conditions

Lifetime	>50.000h L80B10