VISO FERUS 55



Technical drawings

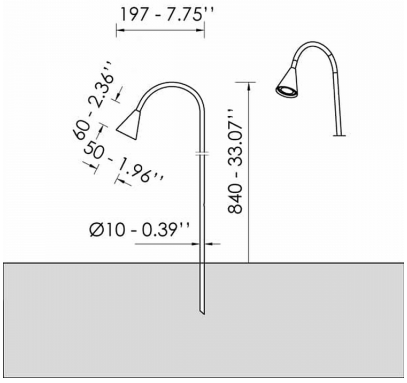

Product Details

CE LM80 Source Type H.P. LED

General Information

Housing	Brass
Product code	BO0412CL109ON
Product family	VISO
Control Gear	Remote Electronic Driver
Options for Dimming Control	On-Off
Height	60 mm
Diameter	50 mm

Electrical data

Consumption	1.7 W
Performance	103.53 lm/W
Ripple	3
Power Factor	0.96

Luminaire Output

Beam Type	M
Beam	25º
Luminous Flux	176 lm
CRI CCT	940

Light distribution

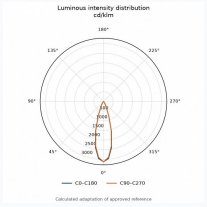

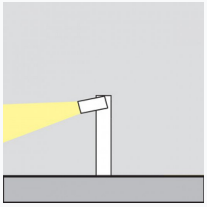

Safety characteristics

IK	05
IP	65

Temperature Operating Conditions

Lifetime	>50.000h L80B10