NINIO 2 OPAL LINEAR LED 3 INOX



Technical drawings

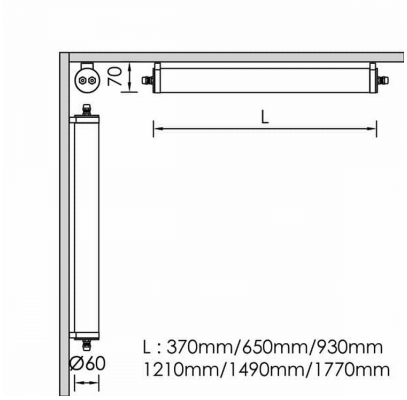

Product Details

CE LM80 Source Type Linear LED

General Information

Housing	PMMA
Product code	FA3829CL135DA
Product family	NINIO
Diffuser	Clear PMMA
Control Gear	Built-in ECG
Options for Dimming Control	DALI2
Height	70 mm

Electrical data

Consumption	6.35 W
Performance	110.24 lm/W
Ripple	3
Power Factor	0.96
Nominal Voltage	230 V

Luminaire Output

Luminous Flux	700 lm
CRI CCT	927

Light distribution

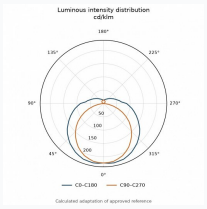

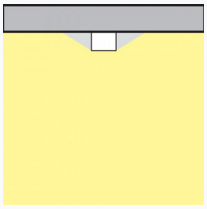

Safety characteristics

IK	05
IP	68

Temperature Operating Conditions

Lifetime	>60.000h L70B10