PALIO 2 L LED FROSTED



Technical drawings

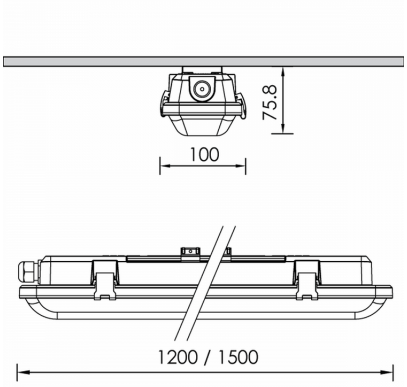

Product Details

CE LM80 Source Type Linear LED

General Information

Housing	ABS
Product code	CM0646DA
Product family	PALIO
Diffuser	Frosted UV-resistant polycarbonate
Control Gear	Built-in ECG
Options for Dimming Control	DALI2
Width	100 mm
Length	1200 mm
Height	75.8 mm

Electrical data

Consumption	27 W
Performance	141.85 lm/W

Luminaire Output

Luminous Flux	3830 lm
CRI CCT	927

Light distribution

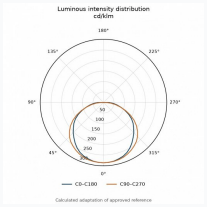

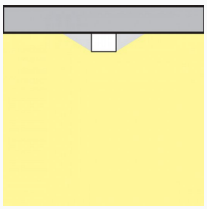

Safety characteristics

IK	08
IP	65

Temperature Operating Conditions

Lifetime	>80.000h