CAVUS WALL



Technical drawings

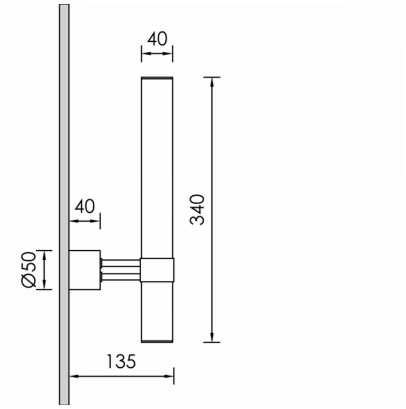

Product Details

CE

Source Type LED Strip

General Information

Housing	Brass, Aluminium, Steel
Product code	DEW0163CL001DA
Product family	CAVUS
Diffuser	Opal PMMA
Control Gear	Remote Electronic Driver
Options for Dimming Control	DALI2
Height	340 mm
Diameter	40 mm

Electrical data

Consumption	5.31 W
Performance	86.25 lm/W
Power Factor	0.96
Nominal Voltage	230 V

Luminaire Output

Luminous Flux	458 lm
CRI CCT	930

Light distribution

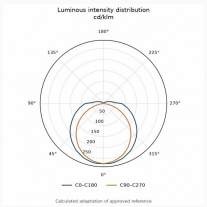

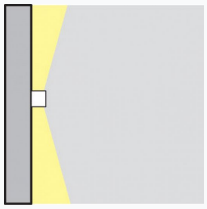

Safety characteristics

IK	06
IP	40

Temperature Operating Conditions

Lifetime	: >50.000h | L80B10 | Energy Saving A+