COMIS OUT WALL LENS TAPE LED

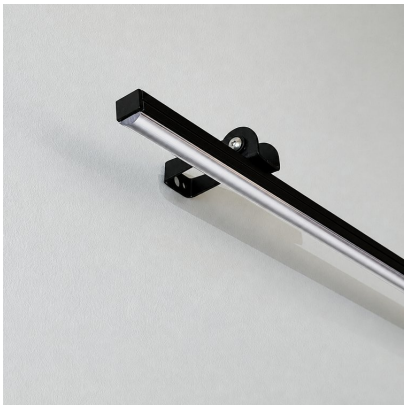

Technical drawings

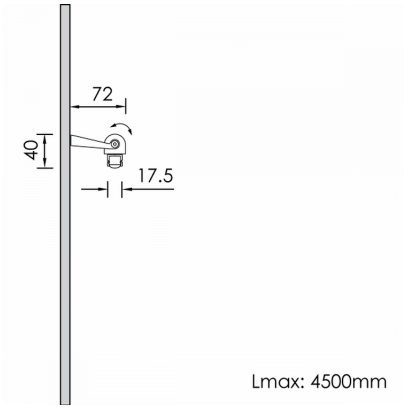

Product Details

Source Type LED Strip

General Information

Housing	Aluminium
Product code	PRW0243CL002ON
Product family	COMIS
Diffuser	Polycarbonate lens
Control Gear	Remote Electronic Driver
Options for Dimming Control	On-Off
Width	72 mm
Length	100 mm
Height	40 mm

Electrical data

Consumption	1.44 W
Performance	94.44 lm/W
Power Factor	0.96

Luminaire Output

Luminous Flux	136 lm
CRI CCT	930

Light distribution

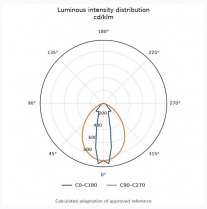

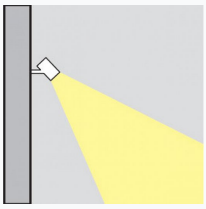

Safety characteristics

IK	05
IP	40

Temperature Operating Conditions

Lifetime	: >50.000h | L80B10 | Energy Saving A+