NINIO S



Technical drawings

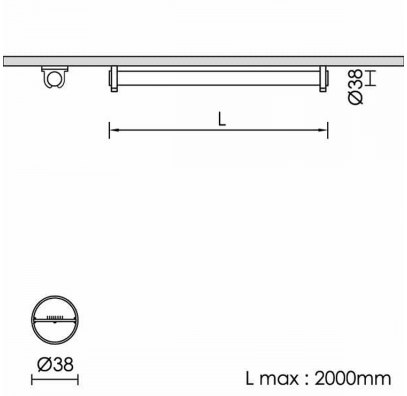

Product Details

CE

Source Type LED Strip

General Information

Housing	PMMA
Product code	FA3969CL001DA
Product family	NINIO
Diffuser	Opal PMMA
Control Gear	Remote Electronic Driver
Options for Dimming Control	DALI2

Electrical data

Consumption	15.9 W
Performance	96.42 lm/W
Power Factor	0.96

Luminaire Output

Luminous Flux	1533 lm
CRI CCT	940

Light distribution

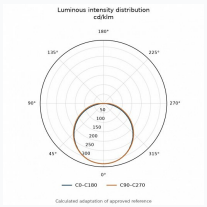

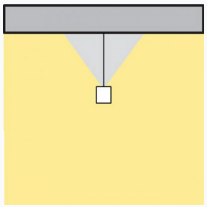

Safety characteristics

IK	06
IP	54

Temperature Operating Conditions

Lifetime	: >50.000h | L80B10 | Energy Saving A+