# NINIO S



## Technical drawings

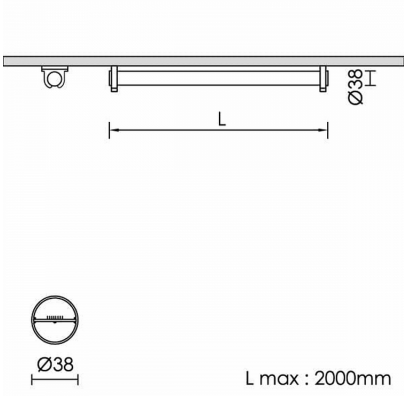


## Product Details

CE

Source Type LED Strip

### General Information

| | |
|---|---|
| Housing | PMMA |
| Product code | FA3969CL003DA |
| Product family | NINIO |
| Diffuser | Opal PMMA |
| Control Gear | Remote Electronic Driver |
| Options for Dimming Control | DALI2 |

### Electrical data

| | |
|---|---|
| Consumption | 15.9 W |
| Performance | 96.42 lm/W |
| Power Factor | 0.96 |

### Luminaire Output

| | |
|---|---|
| Luminous Flux | 1533 lm |
| CRI CCT | 940 |

### Light distribution

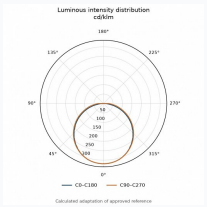


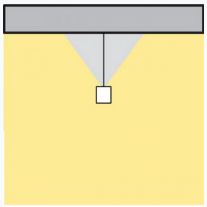

### Safety characteristics

| | |
|---|---|
| IK | 06 |
| IP | 54 |

### Temperature Operating Conditions

| | |
|---|---|
| Lifetime | : >50.000h \| L80B10 \| Energy Saving A+ |