NINIO S



Technical drawings

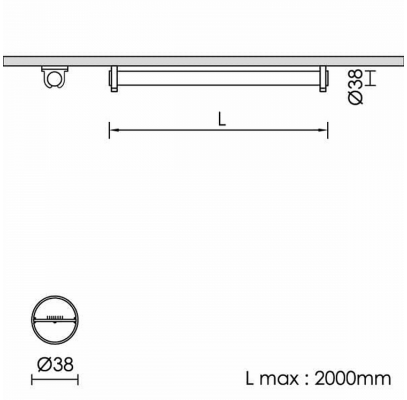

Product Details

CE

Source Type LED Strip

General Information

Housing	Polycarbonate
Product code	FA3972CL002DAC
Product family	NINIO
Diffuser	Opal PMMA
Control Gear	Remote Electronic Driver
Options for Dimming Control	DALI2
Options for Wireless Dimming	Casambi

Electrical data

Consumption	21.2 W
Performance	96.42 lm/W
Power Factor	0.96

Luminaire Output

Luminous Flux	2044 lm
CRI CCT	940

Light distribution

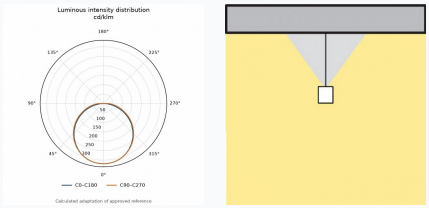

Safety characteristics

IK	06
IP	54

Temperature Operating Conditions

Lifetime	: >50.000h | L80B10 | Energy Saving A+