SOLUS 2



Technical drawings

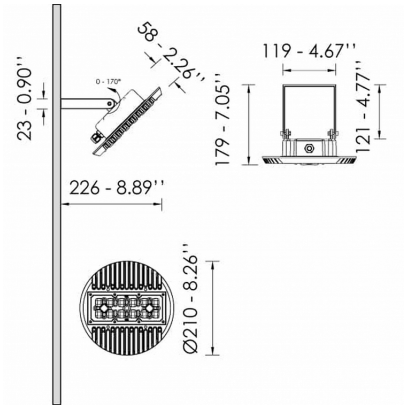

Product Details

CE

Source Type SMD LED

General Information

Housing	Aluminium
Product code	PJ0536CL001ON
Product family	SOLUS
Control Gear	Built-in ECG
Options for Dimming Control	On-Off
Height	58 mm
Diameter	210 mm

Electrical data

Consumption	13 W
Performance	148.46 lm/W
Ripple	3

Luminaire Output

Beam Type	VW
Beam	100º
Luminous Flux	1930 lm
CRI CCT	840

Light distribution

Safety characteristics

IK	08
IP	65

Temperature Operating Conditions