HEADOFFICE: Showroom 13 Sofokli Venizelou Ave., Likovrisi, P.O. Box 14123, Athens, Greece Tel: (+30) 210 2851 304 I www.bright.gr I info@bright.gr

TERES M7 URBAN 1F



Technical drawings

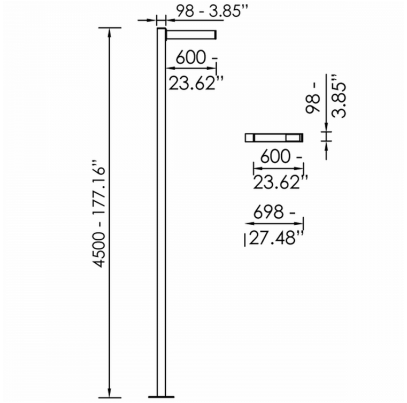

Product Details

CE

Source Type SMD LED

General Information

Housing	Aluminium
Product code	AM0585CL003ON
Product family	TERES
Control Gear	Built-in ECG
Options for Dimming Control	On-Off
Width	98 mm
Length	600 mm
Height	98 mm

Electrical data

Consumption	10 W
Performance	141.6 lm/W

Luminaire Output

Beam Type	I
Luminous Flux	1416 lm
CRI CCT	830

Light distribution

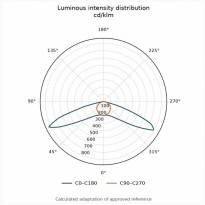

Safety characteristics

IK	10
IP	66

Temperature Operating Conditions