# TERES M7 URBAN 1F



## Technical drawings

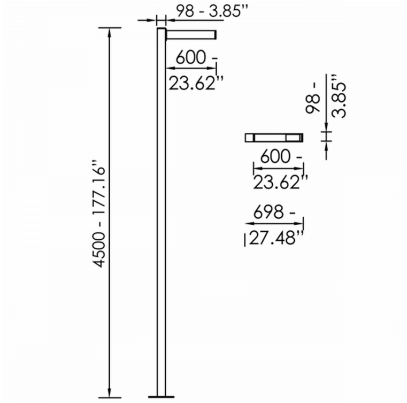


## Product Details

CE

Source Type SMD LED

### General Information

| | |
|---|---|
| Housing | Aluminium |
| Product code | AM0587CL002ON |
| Product family | TERES |
| Control Gear | Built-in ECG |
| Options for Dimming Control | On-Off |
| Width | 30 mm |
| Length | 180 mm |
| Height | 10 mm |

### Electrical data

| | |
|---|---|
| Consumption | 10 W |
| Performance | 144.1 lm/W |

### Luminaire Output

| | |
|---|---|
| Beam Type | V |
| Luminous Flux | 1441 lm |
| CRI CCT | 830 |

### Light distribution

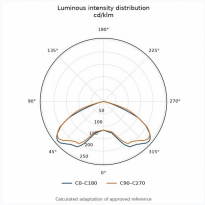


### Safety characteristics

| | |
|---|---|
| IK | 10 |
| IP | 66 |

### Temperature Operating Conditions