TERES M7 URBAN 1F



Technical drawings

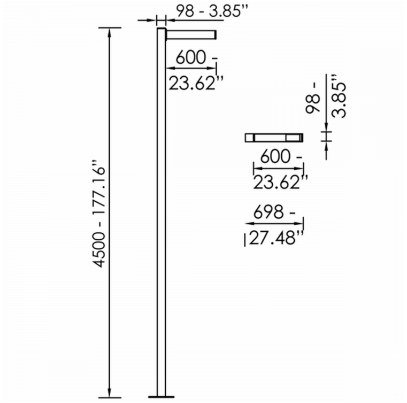

Product Details

CE

Source Type SMD LED

General Information

Housing	Aluminium
Product code	AM0598CL009DA
Product family	TERES
Control Gear	Built-in ECG
Options for Dimming Control	DALI2
Width	98 mm
Length	600 mm
Height	98 mm

Electrical data

Consumption	10 W
Performance	151.6 lm/W

Luminaire Output

Beam Type	I
Luminous Flux	1516 lm
CRI CCT	840

Light distribution

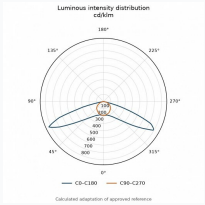

Safety characteristics

IK	10
IP	66

Temperature Operating Conditions