TERES M7 URBAN 1F



Technical drawings

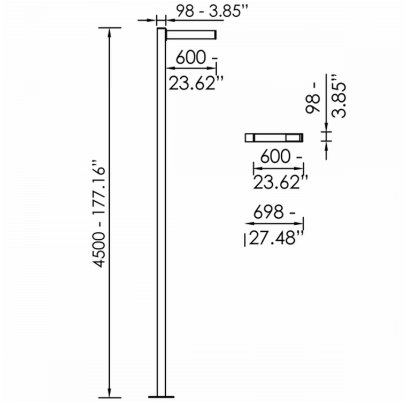

Product Details

CE

Source Type SMD LED

General Information

Housing	Aluminium
Product code	AM0600CL009ON
Product family	TERES
Control Gear	Built-in ECG
Options for Dimming Control	On-Off
Width	30 mm
Length	180 mm
Height	10 mm

Electrical data

Consumption	10 W
Performance	154.1 lm/W

Luminaire Output

Beam Type	V
Luminous Flux	1541 lm
CRI CCT	840

Light distribution

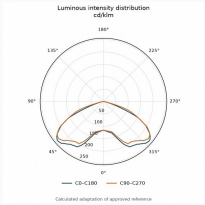

Safety characteristics

IK	10
IP	66

Temperature Operating Conditions