HEADOFFICE: Showroom 13 Sofokli Venizelou Ave., Likovrisi, P.O. Box 14123, Athens, Greece Tel: (+30) 210 2851 304 I www.bright.gr I info@bright.gr

TERES M7 URBAN 2F



Technical drawings

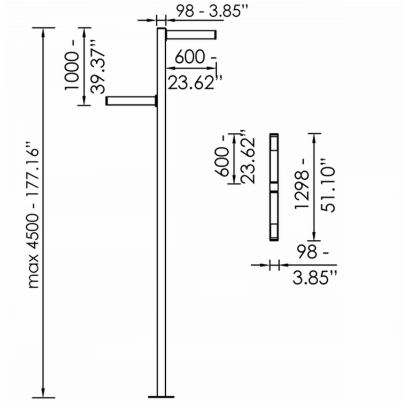

Product Details

CE

Source Type SMD LED

General Information

Housing	Aluminium
Product code	AM0711CL002DA
Product family	TERES
Control Gear	Built-in ECG
Options for Dimming Control	DALI2
Width	30 mm
Length	180 mm
Height	10 mm

Electrical data

Consumption	40 W
Performance	147 lm/W

Luminaire Output

Beam Type	III
Luminous Flux	5880 lm
CRI CCT	830

Light distribution

Safety characteristics

IK	10
IP	66

Temperature Operating Conditions