TERES M7 URBAN 2F



Technical drawings

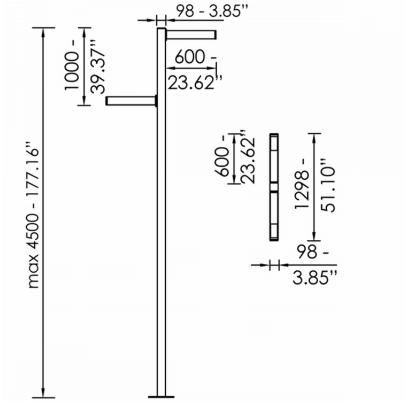

Product Details

CE

Source Type SMD LED

General Information

Housing	Aluminium
Product code	AM0712CL009DA
Product family	TERES
Control Gear	Built-in ECG
Options for Dimming Control	DALI2
Width	30 mm
Length	180 mm
Height	10 mm

Electrical data

Consumption	40 W
Performance	133.15 lm/W

Luminaire Output

Beam Type	III
Luminous Flux	5326 lm
CRI CCT	830

Light distribution

Safety characteristics

IK	10
IP	66

Temperature Operating Conditions