HEADOFFICE: Showroom 13 Sofokli Venizelou Ave., Likovrisi, P.O. Box 14123, Athens, Greece Tel: (+30) 210 2851 304 I www.bright.gr I info@bright.gr

# CERNO 9 LED



## Technical drawings

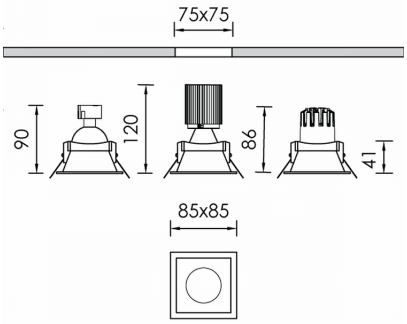


## Product Details

CE

Source Type COB LED

### General Information

| | |
|---|---|
| Housing | Plastic |
| Product code | DL5362CL002DA |
| Product family | CERNO |
| Options for Dimming Control | DALI2 |
| Width | 85 mm |
| Length | 85 mm |
| Height | 120 mm |

### Electrical data

| | |
|---|---|
| Consumption | 6.35 W |
| Performance | 107.09 lm/W |
| Ripple | 3 |
| Power Factor | 0.96 |
| Nominal Voltage | 230 V |

### Luminaire Output

| | |
|---|---|
| Beam Type | N |
| Beam | 17º |
| Luminous Flux | 680 lm |
| CRI CCT | 930 |

### Light distribution

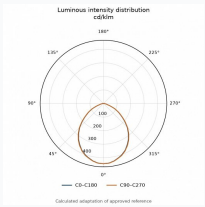


### Safety characteristics

| | |
|---|---|
| IP | 20 |

### Temperature Operating Conditions